Cambridge Brass
P.O. Box 249
140 Orion Place
Cambridge, Ontario
Canada N1R 5V1
Tel: (519) 621-5520
Fax: (519) 621-8674
http://www.cambridgebrass.com

CAMBRIDGE BRASS

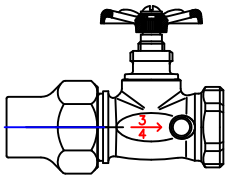

MODEL NO. 32

COPPER FLARE x FIP

COMP. STOP & DRAIN VALVE

FOR COPPER OR PLASTIC TUBING (CTS)

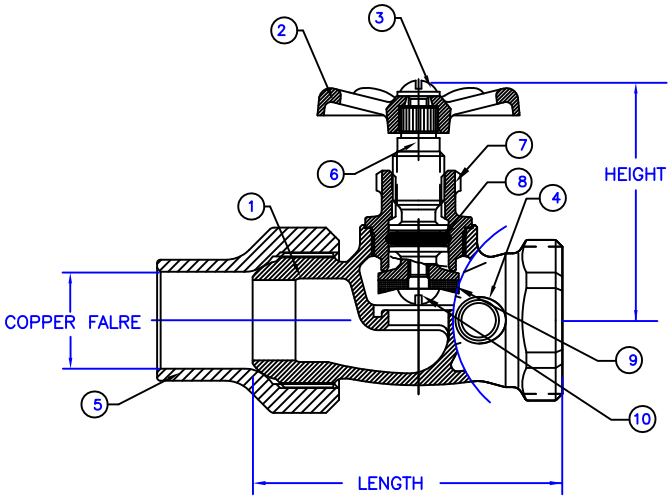

PARTS AND MATERIAL:
1. VALVE BODY: CAST BRASS, ALLOY C83600
2. HAND WHEEL: ALUMINUM 383
3. HANDLE SCREW: STEEL
4. DRAIN ASS'Y: CAP ALLOY C36000
   GASKET BUNA-N
5. COPPER FLARE NUT: CAST BRASS, ALLOY C83600
6. STEM, ALLOY C36000
7. BONNET, ALLOY C36050
8. O-RING, NITRILE
9. SEAT, BUNA-N
10. SCREW, ALLOY C36000

FEATURES:
- MANUFACTURED IN COMPLIANCE WITH AWWA STANDARD C800-05 (ASTM B-62 AND ASTM B-584, UNS NO C83600-85-5-5-5).
- <X> CAS CLASSIFIED TO ANSI/NSF STANDARD 61-8.
- FLOW CAN BE IN EITHER DIRECTION.
- 125 PSI WORKING PRESSURE

Cambridge Brass considers the information in this submittal form to be correct at the time of publication.
Item and option availability, including specifications, are subject to change without notice.

VALVE SIZE	CATALOG NO.	COPPER FLARE	FIP	LENGTH	HEIGHT	APPROX. WT. LBS.	CLASSIFIED NSF 61-8
3/4"	32-C3F3	3/4"	3/4"	2.89"	2.24"		

Submitted by:

FILE: SUBMITTAL/32-C_F_.DWG
REV. A - JANUARY 2010