Cambridge Brass
P.O. Box 249
140 Orion Place
Cambridge, Ontario
Canada N1R 5V1
Tel: (519) 621-5520
Fax: (519) 621-8674
http://www.cambridgebrass.com

CAMBRIDGE BRASS

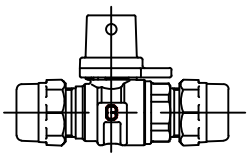

MODEL NO. 212NL

CB COMPRESSION x CB COMPRESSION

STRAIGHT METER VALVE – BALL STYLE
FULL PORT WITH LOCKWING

FOR COPPER OR PLASTIC TUBING (CTS)

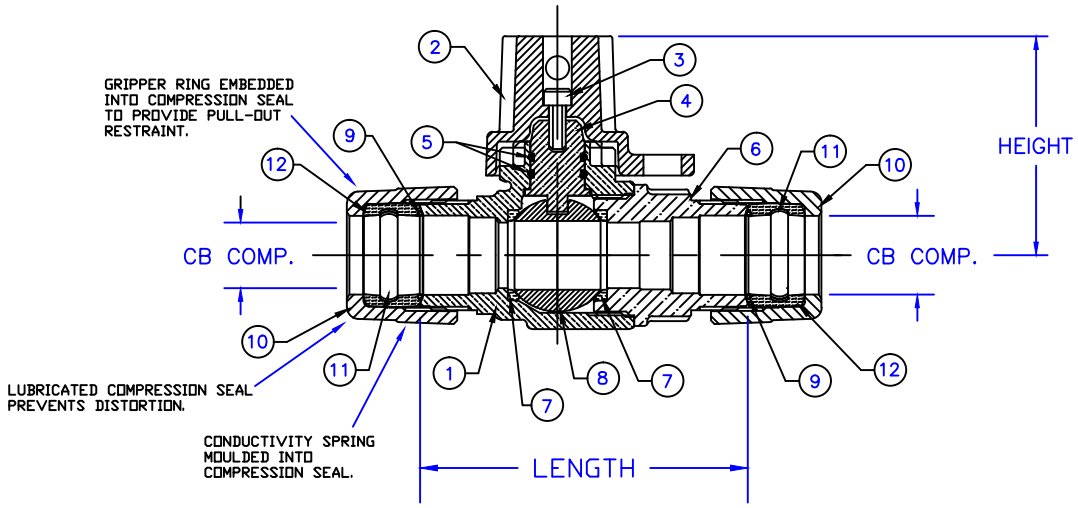

PARTS AND MATERIAL:
1. VALVE BODY: CAST BRASS, ALLOY C89833
2. LOCKING CAP: CAST BRASS, ALLOY C83600
3. CAP SCREW: STAINLESS STEEL, TYPE 304
4. STEM: STAINLESS STEEL, TYPE 303
5. O-RING: NITRILE RUBBER
6. ENDBODY: CAST BRASS, ALLOY C89833
7. SEATS: TEFLON
8. BALL: CAST BRASS, ALLOY C89833
9. CONDUCTOR SPRING: BRASS
10. TAILNUT: CAST BRASS, ALLOY C83600
11. GRIPPER: STAINLESS STEEL, TYPE 302
12. COMPRESSION SEAL: EPDM

FEATURES:
- MANUFACTURED IN COMPLIANCE WITH AWWA STANDARD C800 (ASTM B-584, UNS NO C89833).
- CONFORMS TO ANSI/NSF 61-8
- CONFORMS TO ANSI/NSF 372 (COMPLIANT WITH US Safe Drinking Water Act. PL 111-380)
- FLOW CAN BE IN EITHER DIRECTION.
- ROTATION STOPS RESISTS 200 FT-LB TORQUE.
- ENCAPSULATED LUGS UNDER CAP PROVIDE 90 DEGREE OPEN TO CLOSE OPERATION.
- BLOWOUT PROOF DESIGN.
- 300 PSI WORKING PRESSURE.
- HOLE FOR ATTACHING HANDLE IS PROVIDED IN CAP.
- PADLOCK WING FOR LOCKING VALVE IN CLOSED POSITION.

ORDERING INFORMATION:
FULL 360 ROTATION = ADD "R" TO END OF CATALOG NO.
HANDLE = ADD "H" TO END OF CATALOG NO.

Cambridge Brass considers the information in this submittal form to be correct at the time of publication. Item and option availability, including specifications, are subject to change without notice.

VALVE SIZE	CATALOG NO.	CB COMP.	CB COMP.	LENGTH	HEIGHT	APPROX. WT. LBS.
3/4"	212NL-H3H3	3/4"	3/4"	3.75"	2.50"	2.4
1"	212NL-H4H3	1"	3/4"	4.12"	2.68"	
1"	212NL-H4H4	1"	1"	4.42"	2.68"	
1 1/2"	212NL-H6H6	1 1/2"	1 1/2"	6.56"	3.31"	9.0
2"	212NL-H7H7	2"	2"	6.83"	3.61"	12.4

Submitted by:

FILE: SUBMITTAL/212NL-H_H_.DWG
BN, NOV 2017