Cambridge Brass
P.O. Box 249
140 Orion Place
Cambridge, Ontario
Canada N1R 5V1
Tel: (519) 621-5520
Fax: (519) 621-8674
http://www.cambridgebrass.com

CAMBRIDGE BRASS

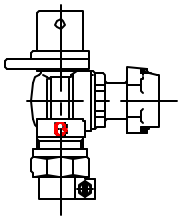

MODEL NO. 210NL

CAMPAK x METER SWIVEL NUT

ANGLE METER VALVE – BALL STYLE
FULL PORT WITH LOCKWING

FOR COPPER OR PLASTIC TUBING x METER SPUD

PARTS AND MATERIAL:
1. VALVE BODY: CAST BRASS, ALLOY C89833
2. LOCKING CAP: CAST BRASS, ALLOY C83600
3. CAP SCREW: STAINLESS STEEL, TYPE 304
4. STEM: STAINLESS STEEL, TYPE 303
5. O–RING: NITRILE RUBBER
6. ENDBODY: CAST BRASS, ALLOY C89833
7. SEATS: TEFLON
8. BALL: CAST BRASS, ALLOY C89833
9. TAILNUT: CAST BRASS, ALLOY C83600
10. COMPRESSION SEAL: NITRILE RUBBER
11. SCREW: STAINLESS STEEL, ALLOY 304
12. SEALING WASHER: NITRILE RUBBER
13. RETAINER RING: PHOSPUR BRONZE WIRE
14. METER SWIVEL NUT: CAST BRASS, ALLOY C84400

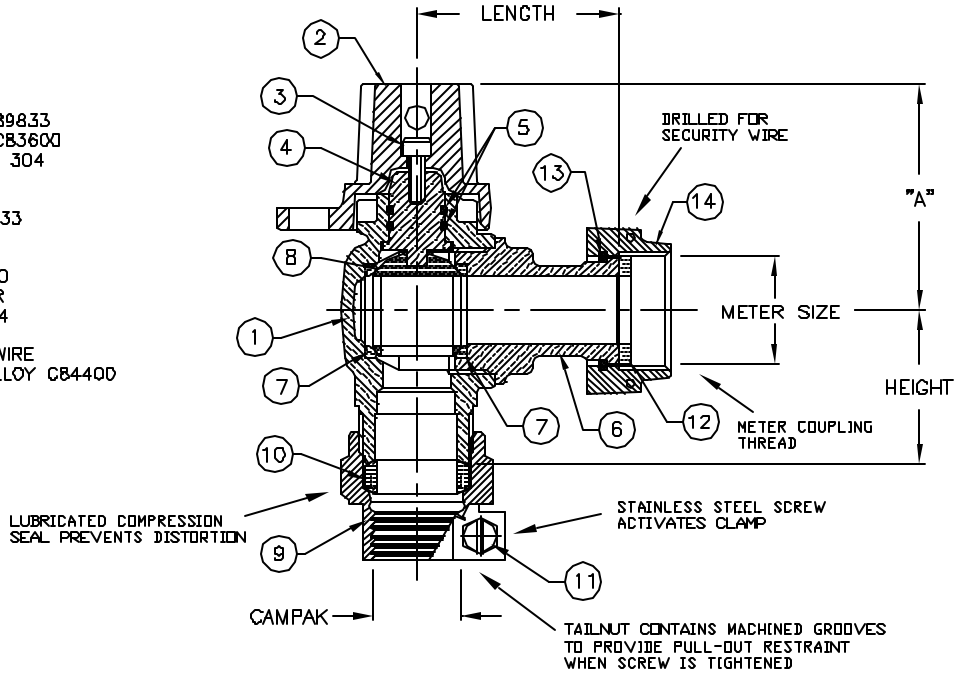

FEATURES:
- MANUFACTURED IN COMPLIANCE WITH AWWA STANDARD C800–05 (ASTM B–584, UNS NO C89833).
- CSA CLASSIFIED TO ANSI/NSF STANDARD 61–8.
- FLOW CAN BE IN EITHER DIRECTION.
- ROTATION STOPS RESISTS 200 FT–LB TORQUE.
- ENCAPSULATED LUGS UNDER CAP PROVIDE 90 DEGREE OPEN TO CLOSE OPERATION.
- BLOWOUT PROOF DESIGN.
- 300 PSI WORKING PRESSURE.
- HOLE FOR HANDLE IS PROVIDED IN CAP.
- PADLOCK WING FOR LOCKING VALVE IN CLOSED POSITION.
- METER THREAD CONFORMS TO AWWA C700.

ORDERING INFORMATION:
FULL 360 ROTATION = ADD "R" TO END OF CATALOG NO.
HANDLE = ADD "H" TO END OF CATALOG NO.

Cambridge Brass considers the information in this submittal form to be correct at the time of publication.
Item and option availability, including specifications, are subject to change without notice.

VALVE SIZE	CATALOG NO.	CAMPAK	METER SIZE	HEIGHT	LENGTH	"A"	APPROX. WT. LBS.
3/4"	210NL–B3T3	3/4"	5/8"x3/4" & 3/4"	1.69"	2.25"	2.50"	2.4
3/4"	210NL–B4T3	1"	5/8"x3/4" & 3/4"	2.17"	2.25"	2.50"	2.7
1"	210NL–B4T4	1"	1"	1.97"	2.81"	2.68"	3.4

Submitted by:

FILE: SUBMITTAL/210NL-ST.DWG
REV. E – MARCH 2008